| Rev | Description | Date | By |
|---|---|---|---|
| A | Initial Release | 2/4/2015 | BM |

| Rev | Notes | Date | By |
|---|---|---|---|
| - | | | |
| - | | | |
| - | | | |
| - | | | |
| - | | | |
| - | | | |
| - | | | |

| | |
|---|---|
| Drawn by: | BM |
| Date: | 2/4/2015 |
| Scale: | NONE |
| Title: | WD-850-24253 |
| Proportional Control of FULL MOD | |
| Rev: | A |
| Dwg. No. | |
| Sheet | 1 of 1 |
| Notes, Diagram | |

ProMation Engineering, Inc.
10136 Hague Rd.
Indianapolis, IN 46256
Phone: 800-845-6486 Fax: 800-845-6429

The Position Override (OVD) control signal (line voltage hot) will drive the actuator to position determined by the controller option (Open or Closed) after a 5 second delay, removing the situation where the actuator is receiving normal proportional control from the signal in control.

Note: Override direction is determined by loss of signal positioning

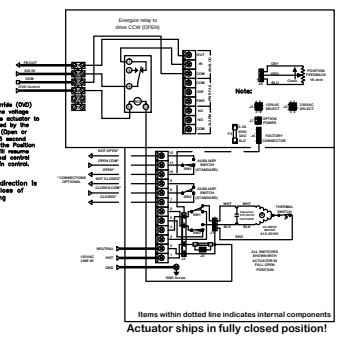


Items within dotted line indicates internal components

**Actuator ships in fully closed position!**

Use For:

**P2/3-120PN4-Override**

This document is the property of ProMation Engineering, Inc.
Distribution of this document without the written consent of this owner is strictly forbidden.
Failure to comply will incur a liability for damages.