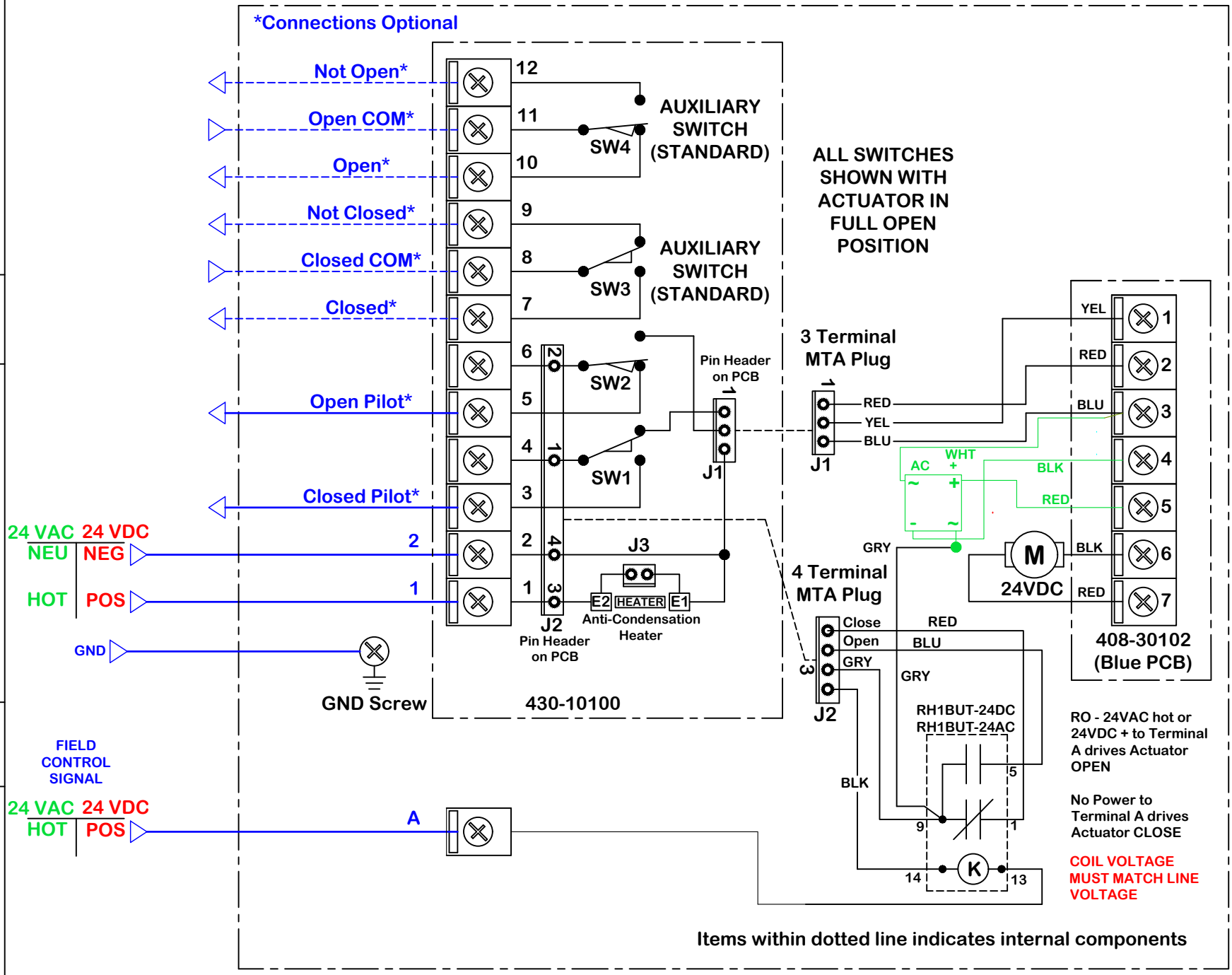

Actuator ships in fully closed position!

Use For:

P2/8-24N(4,7)+AC(DC) - RO

rev	change date	revision	name
a	04.21.22	Converted to RO from WD-850-PA101 E.dwg	DJG
b			
c			
d			
e			
f			
g			
h			

naming · material no · ind · material

dwn by: BJW · Date 4.23.2015 · scale NONE

ProMation

4/21/2022 3:03 PM

WD-850-PA501 A

Wiring Diagram for 2 position or Jog Control. P2/8 Series 24AC or VDC Actuators, Positive Switched.

Wiring Diagram

REV A

P:\C CAD Files\Factory Wiring Dwgs\WD-All CAD Files\WD-850\P2~3 (2~8)

ProMation Engineering, Inc.
16138 Flight Path Drive
Brooksville, FL 34604
Ph:352-544-8436 Fx(352-544-8439

This document is the property of ProMation Engineering, Inc.
Distribution of this document without the written consent of the owner is strictly forbidden.
Failure to comply will incur a liability for damages.