rev	change date	revision	name
a	.		
b	.		
c	.		
d	.		
e	.		
f			
g			
h	.	New Document	PMR

naming

dwn by: BJW

Date 10.10.2012

scale NONE

material no

ind

material

Wiring Diagram

ProMation

3/19/2021 3:49 PM

Motor Control Center 480/3/60 for P2-13
Proportional Control
MCC – Motor Control Center and LCS included

P:\C CAD Files\Factory Wiring Dwgs\WD-All CAD Files\WD-858

WD-858-08282

REV **A**

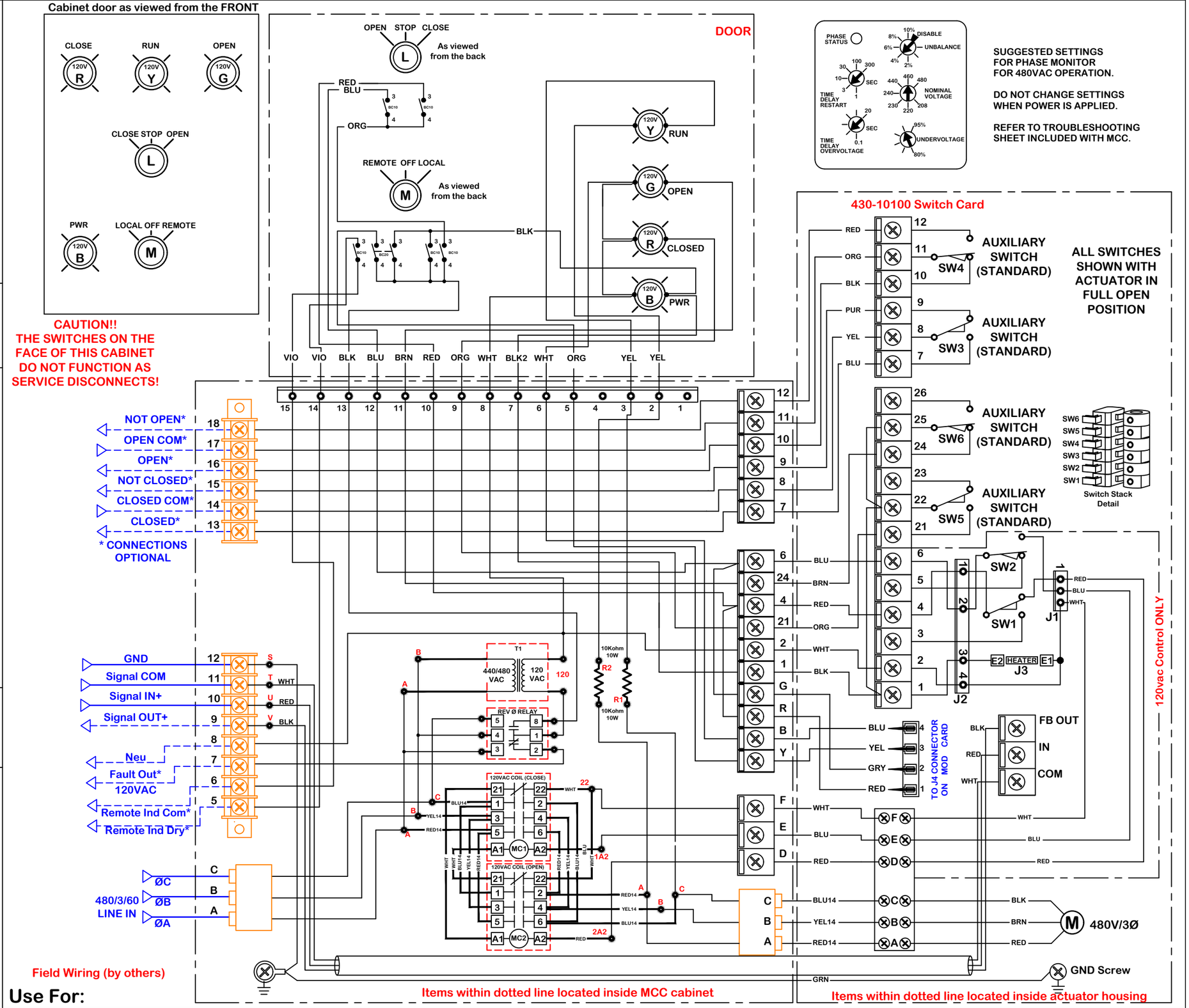

SUGGESTED SETTINGS FOR PHASE MONITOR FOR 480VAC OPERATION.

DO NOT CHANGE SETTINGS WHEN POWER IS APPLIED.

REFER TO TROUBLESHOOTING SHEET INCLUDED WITH MCC.

Use For:

P213-480/3/60 PN4-MCC

ProMation Engineering, Inc.
16138 Flight Path Drive
Brooksville, FL 34604
Ph:352-544-8436 Fx(352-544-8439

This document is the property of ProMation Engineering, Inc.
Distribution of this document without the written consent of the owner is strictly forbidden.
Failure to comply will incur a liability for damages.