rev	change date	revision	name
a	07.26.23	Revised from WD-858-28286A	DJG
b			
c			
d			
e			
f			
g			
h	.		

naming

dwn by: BJW

Date 10.29.2013

scale NONE

material no

ind

material

Wiring Diagram

ProMation

8/1/2023 12:35 PM

Motor Control Center 480/3/60 for P2~P13
Proportional Control with Modbus
MCC – Motor Control Center and LCS included

WD-858-28290 A

REV **A**

P:\C CAD Files\Factory Wiring Dwgs\WD-All CAD Files\WD-858

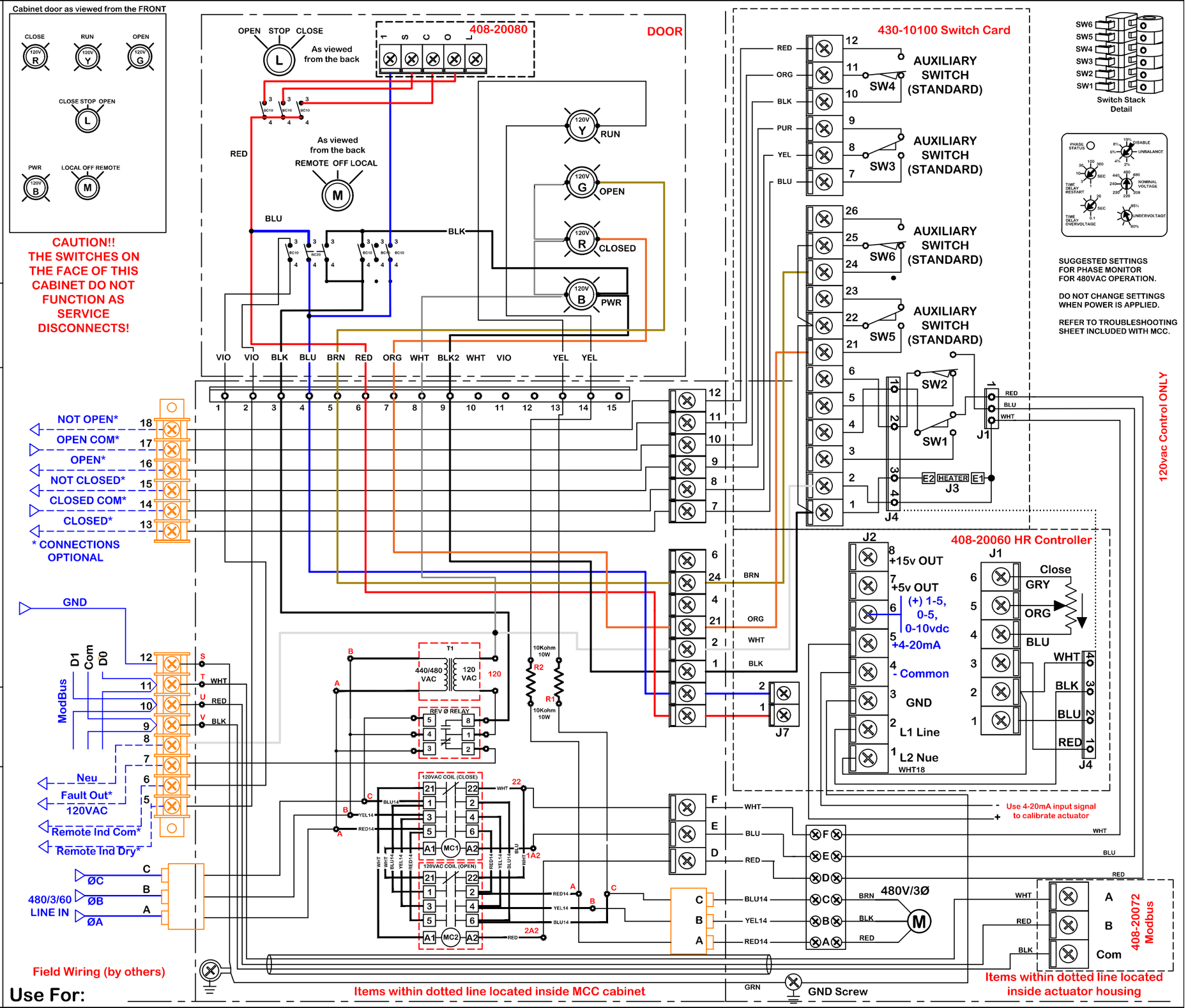

Use For:

P2~P13-480/3/60 MN4-MCC

ProMation Engineering, Inc.
16138 Flight Path Drive
Brooksville, FL 34604
Ph:352-544-8436 Fx(352-544-8439

This document is the property of ProMation Engineering, Inc.
Distribution of this document without the written consent of the owner is strictly forbidden.
Failure to comply will incur a liability for damages.