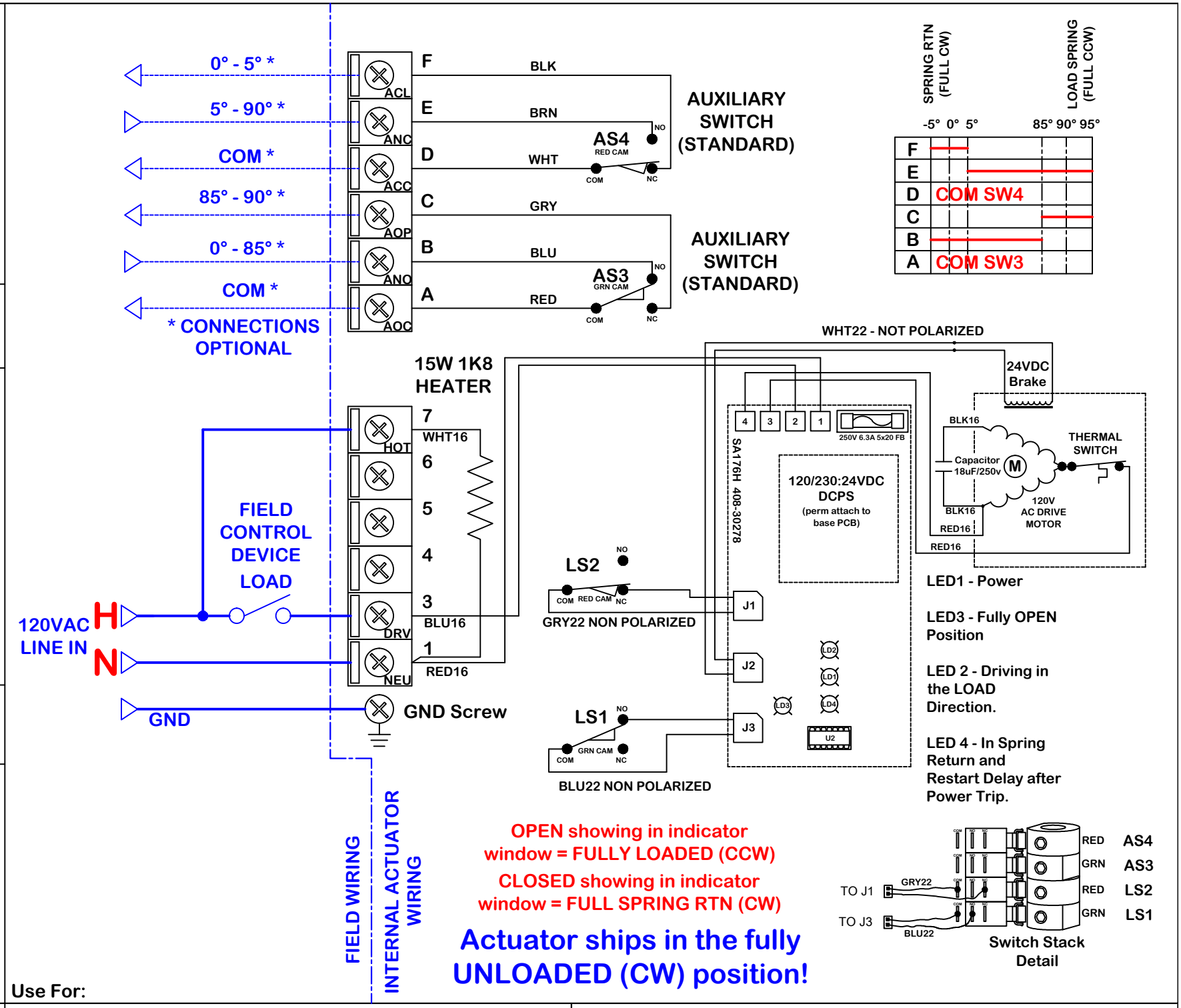


Use For:

# PB/PBO-CW-1202S4/7

| rev | change date | revision | name |
|---|---|---|---|
| m | . | | |
| l | | | |
| k | | | |
| j | 03.28.16 | Fixed NO, NC for LS1, LS2, input colors | TJM |
| i | 11.20.15 | Removed Degauss board from On/Off units Heater is 1K8 | TJM |
| h | 08.03.15 | Removed degauss board | TJM |
| g | 10.23.14 | Added degauss board and cam & board detail Corrected motor wire colors | KHL |
| f | 08.23.12 | Formatting edits | KHL |

naming

dwn by: BJW

Date 4.19.2012

scale NONE

material no

ind

Wiring Diagram

material

ProMation

2/5/2019 11:27 AM

On/Off wiring diagram for 120vac PB(O) Series CW Spring Return Actuators.

WD-850-B4A01

REV J

WD-850-B4A01.dwg


ProMation Engineering, Inc.
16138 Flight Path Drive
Brooksville, FL 34604
Ph:352-544-8436 Fx(352-544-8439



This document is the property of ProMation Engineering, Inc.
Distribution of this document without the written consent of the owner is strictly forbidden.
Failure to comply will incur a liability for damages.