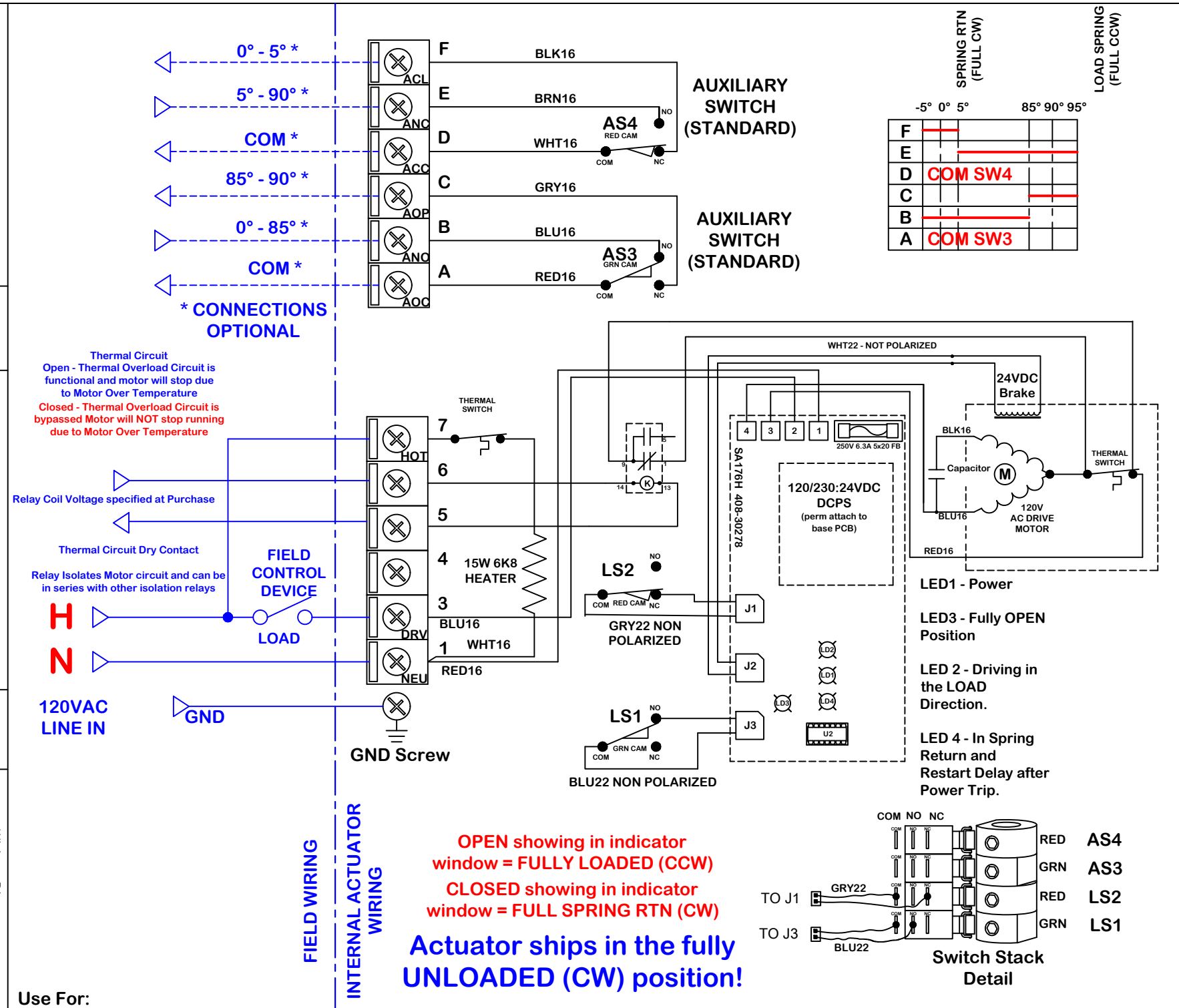

Use For:

PB/PBO-CW-1202S4-BTC w/ relay

ProMation Engineering, Inc.
16138 Flight Path Drive
Brooksville, FL 34604
Ph:352-544-8436 Fx(352-544-8439

This document is the property of ProMation Engineering, Inc.
Distribution of this document without the written consent of the owner is strictly forbidden.
Failure to comply will incur a liability for damages.

rev	change date	revision	name
A	04.05.23	Add BTC relay to 850-B4A02 C	DJG

dwn by:	BJW
Date	10.20.2014
scale	NONE

ProMation

4/6/2023 4:58 PM

On/Off wiring diagram for 120VAC PB(O) CW Spring Return with internal motor thermo-switch bypass out (BTC) relay op.

WD-850-B4A0R.dwg

REV A

WD-850-B4A0R

Wiring Diagram

naming | material no | ind | material