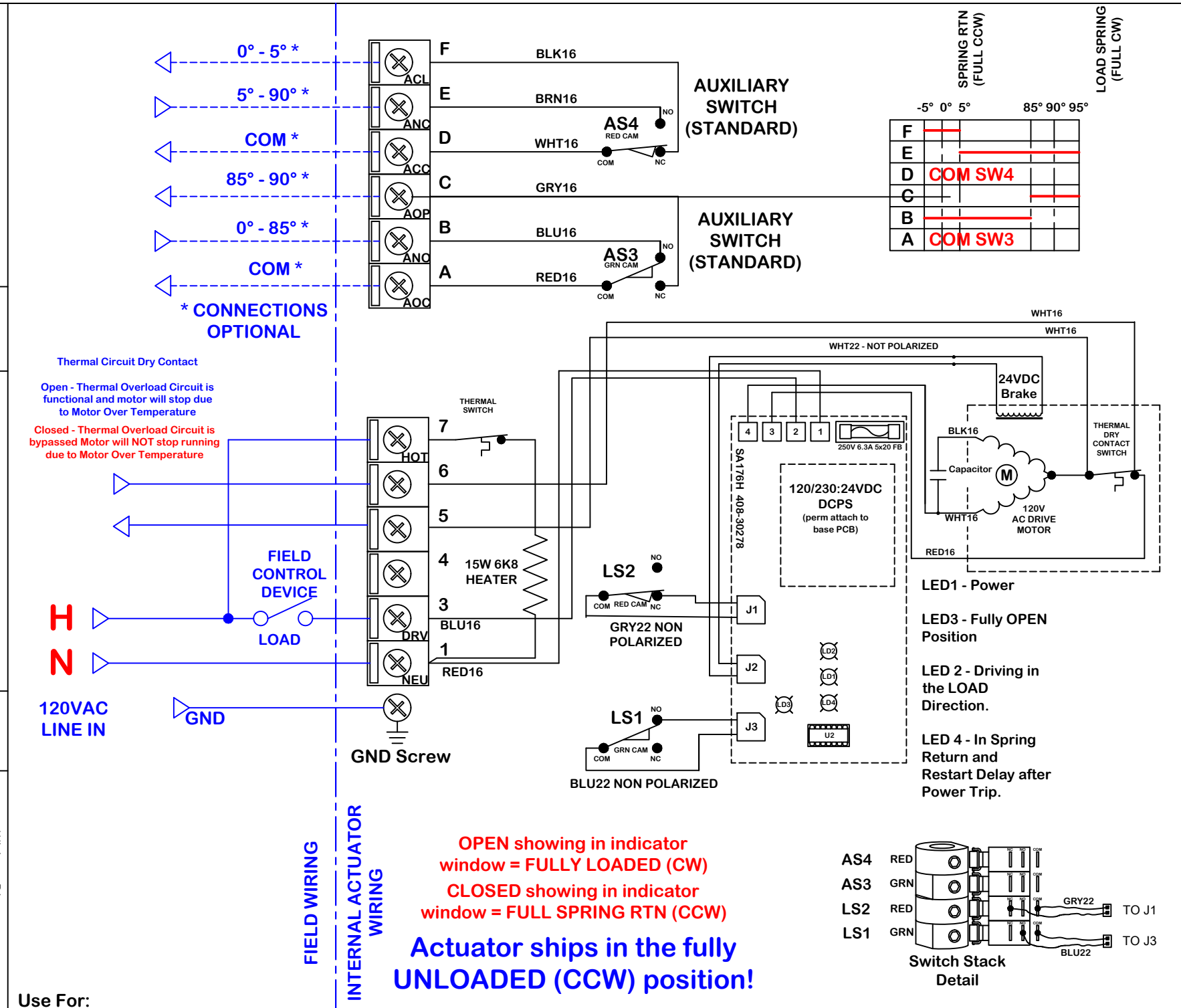

Use For:

rev	change date	revision	name
B	03.19.19	Added Thermal Switch option fo heater	DJG
A	10.09.17	B5B02 (C) voltage change	DJG

naming

material no

ind

material

Wiring Diagram

dwn by: BJW

Date 10.20.2014

scale NONE

ProMation

4/1/2019 5:51 PM

On/Off wiring diagram for 120VAC PB(O) CCW Spring Return with internal motor thermo-switch bypass out (BTC).

WD-850-B4B02 B.dwg

REV B

WD-850-B4B02 B

PB/PBO-CCW-1202S4-BTC

ProMation Engineering, Inc.
16138 Flight Path Drive
Brooksville, FL 34604
Ph:352-544-8436 Fx(352-544-8439

This document is the property of ProMation Engineering, Inc.
Distribution of this document without the written consent of the owner is strictly forbidden.
Failure to comply will incur a liability for damages.