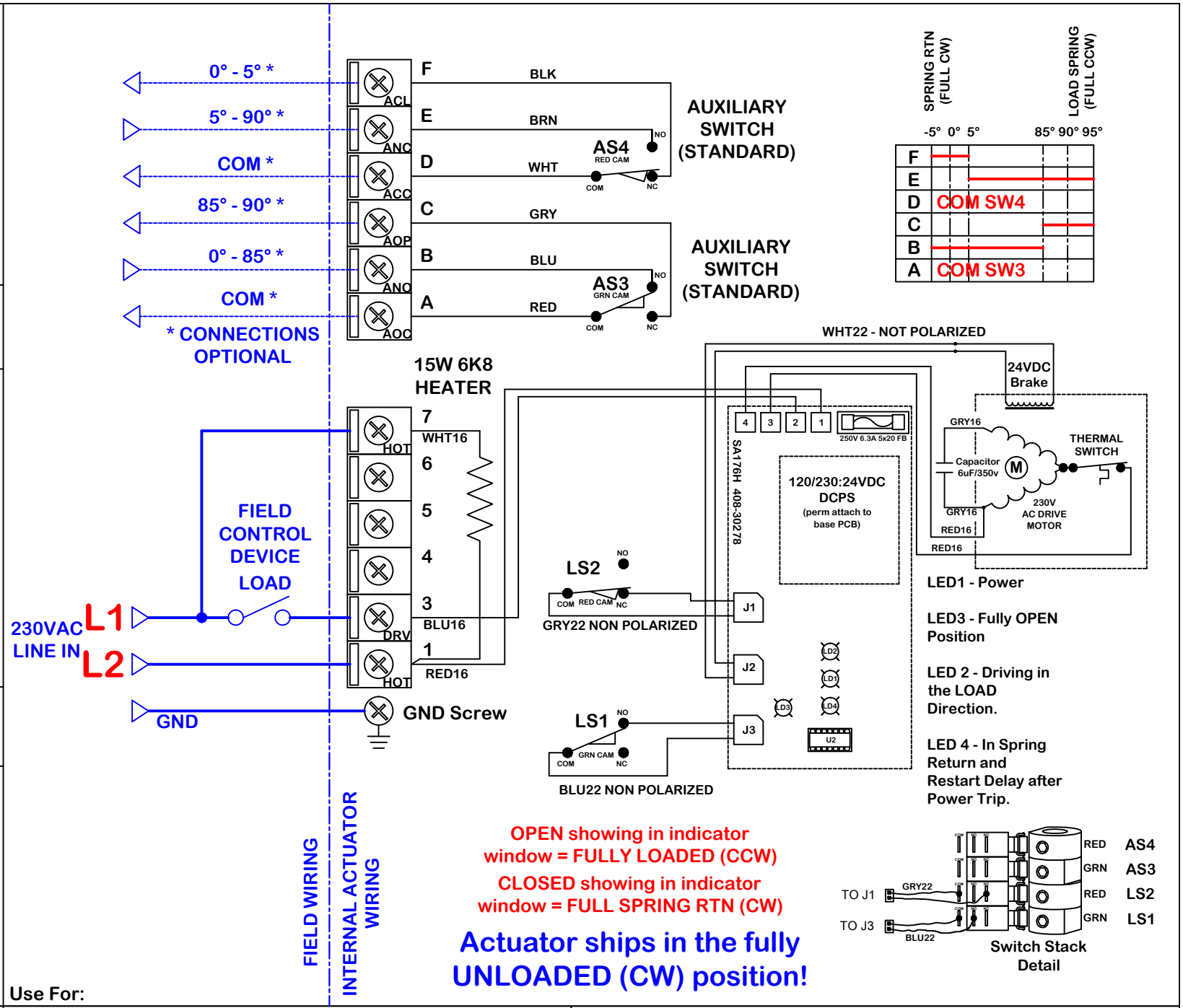

Use For:

PC/PCO-CW-2302S4

rev	change date	revision	name
m	.		
l			
k			
j	03.29.16	Fixed NO, NC for LS1, LS2, Input colors	TJM
i	02.11.16	LS2 NC to J1 (was NO), and Switch Stack detail Line in colors now Blue.	TJM
h	04.17.2015	Removed degauss board from On/Off units	KHL
g	10.23.14	Added degauss board and cam & board detail Corrected motor wire colors	KHL
f	08.23.12	Formatting edits	KHL

naming

material no

ind

Wiring Diagram

material

dwn by: BJW

Date 4.19.2012

scale NONE

ProMation

4/29/2016 3:20 PM

On/Off wiring diagram for 230vac PC(O) Series CW Spring Return Actuators.

WD-850-C5A01

REV J

WD-850-C5A01.dwg

ProMation Engineering, Inc.
16138 Flight Path Drive
Brooksville, FL 34604
Ph:352-544-8436 Fx(352-544-8439

This document is the property of ProMation Engineering, Inc.
Distribution of this document without the written consent of the owner is strictly forbidden.
Failure to comply will incur a liability for damages.