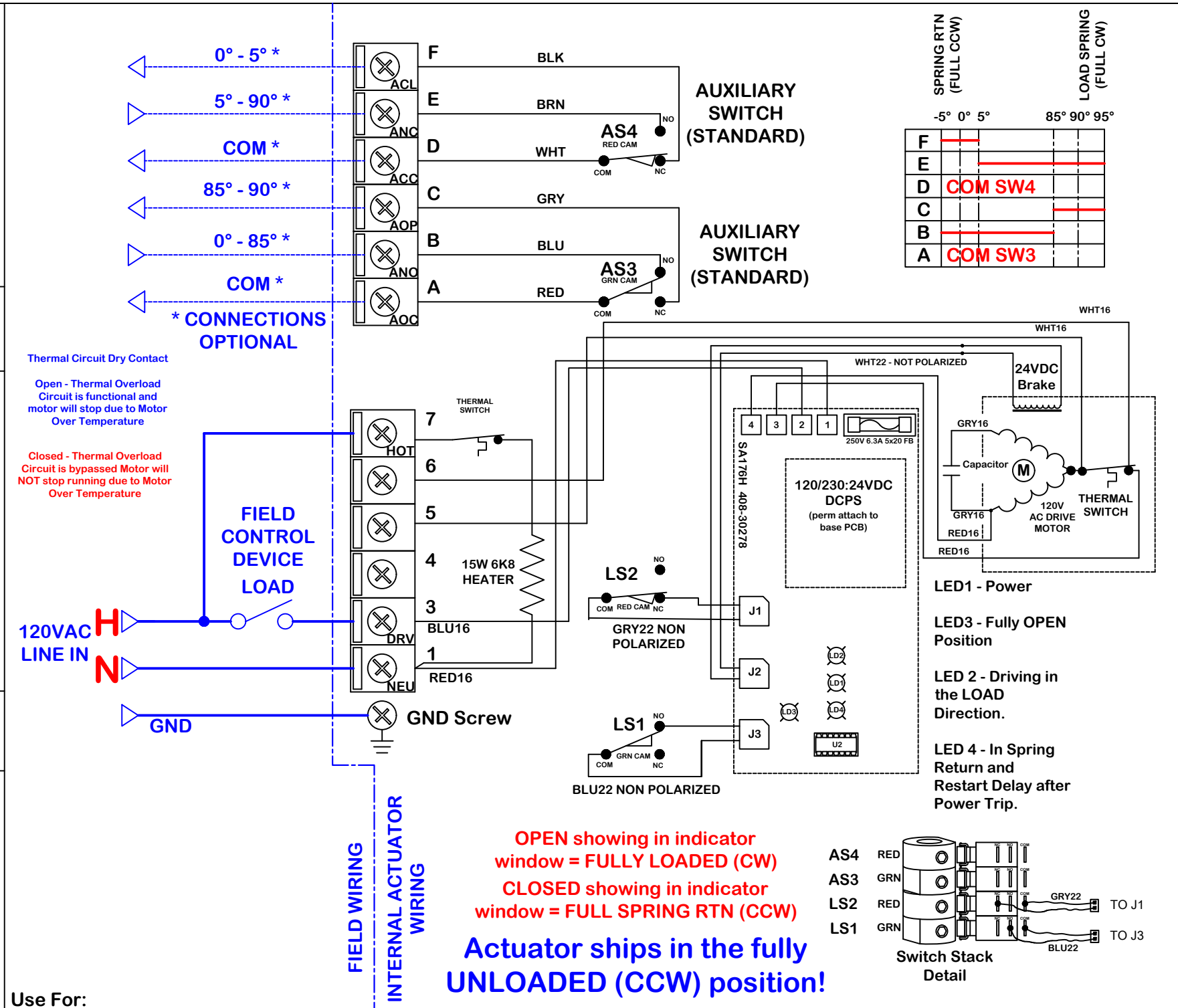

Use For:

PD/PDO-CCW-1202S4-BTC

ProMation Engineering, Inc.
16138 Flight Path Drive
Brooksville, FL 34604
Ph:352-544-8436 Fx(352-544-8439

This document is the property of ProMation Engineering, Inc.
Distribution of this document without the written consent of the owner is strictly forbidden.
Failure to comply will incur a liability for damages.

rev	change date	revision	name
A	01.18.19	D5B02 B – changed Voltage	DJG

dwn by:	BJW
Date	4.19.2012
scale	NONE

ProMation

4/1/2019 5:48 PM

On/Off wiring diagram for 120VAC PD(O) CCW Spring Return with internal motor thermo-switch bypass out (BTC).

WD-850-D4B02 A.dwg

REV A

WD-850-D4B02 A

Wiring Diagram

material

material no

ind

naming

.

.