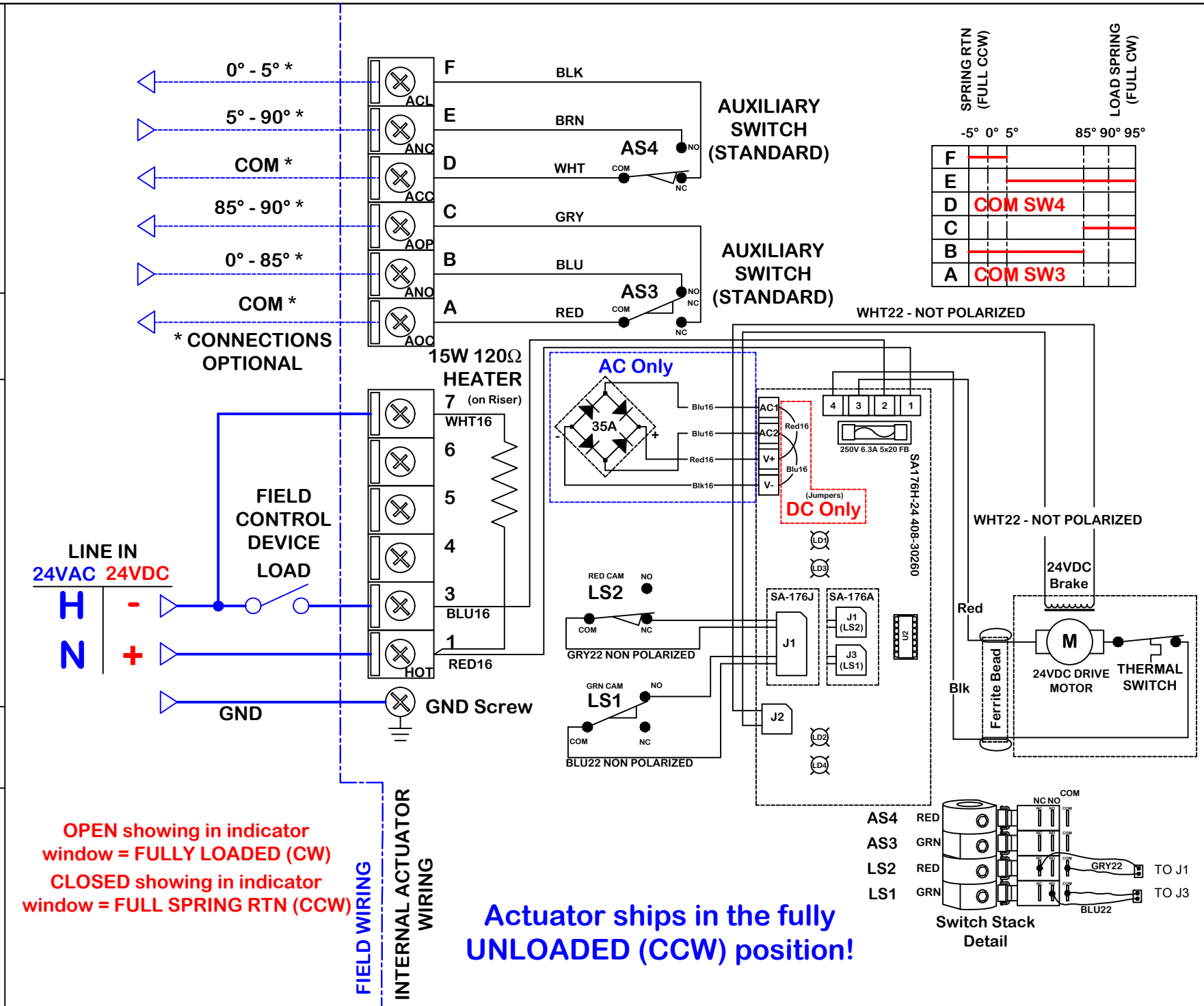

Use For:

PA-PD(O)-CCW-24A/D2S4 (7)

rev	change date	revision	name
a	03.09.16	New WD: Replaces 850-B2B01, B3B01, Control Board P/N, wire colors. Dual power inputs.	TJM
b	11.06.17	Change AC lines to match DC	DJG
c	11.06.17	Change polarity on control board for line and motor for new board introduced Jan 18	DJG
d	08.12.19	Changed title to show PA-PD	DJG
e	12.08.21	Change polarity on incoming line to match SY Changed control board to new pin config	DJG
f			
g			
h			

naming

dwn by: TJM

Date 01.29.2015

scale NONE

material no

ind

material

Wiring Diagram

WD-850-EAB02 E

On/Off wiring diagram for 24VAC or 24VDC PA-PD(O)Series CCW Spring Return Actuators.

REV E

ProMation

12/7/2021 1:31 PM

WD-850-EAB02 E.dwg

ProMation Engineering, Inc.
16138 Flight Path Drive
Brooksville, FL 34604
Ph:352-544-8436 Fx(352-544-8439

This document is the property of ProMation Engineering, Inc.
Distribution of this document without the written consent of the owner is strictly forbidden.
Failure to comply will incur a liability for damages.