Description of Operation:
Local / Remote On/Off/Jog control

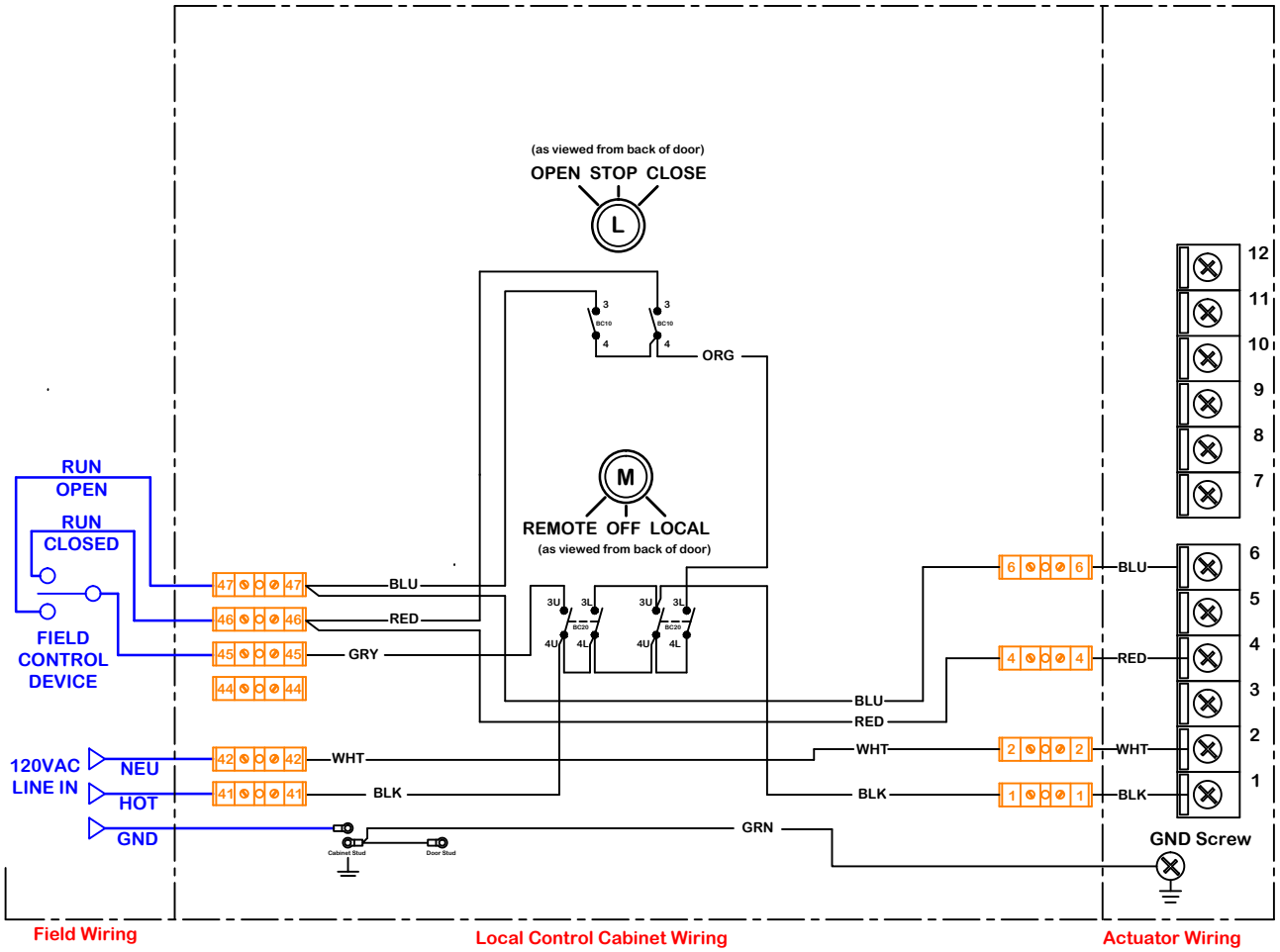

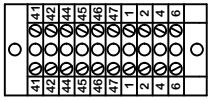

Terminal Block Layout (10x2)

Term Block Filename: Altech 875 LA213120D

Faceplate Filename: 2 hole 5x5 Steel

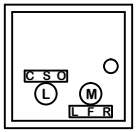

Door Hole Pattern

Back Hole Pattern

Notes:

Use this solution for:
P2~P13 Series

Use For:

OPT LCS LA P2~13 P/S/F 120 D/R

rev	change date	revision	name
d	04.08.14	Corrected Terminal Block Layout	KHL
c	08.24.12	Formatting and detail edits	KHL

naming

dwn by:	Date	
BJW	11.10.2011	

scale NONE

material no

ind

material

Wiring Diagram

ProMation

Wiring Diagram for Local Control Station
P2~13 Series 120VAC Actuators

REV D

WD 875 LA 213 120 D

4/8/2014 10:04 AM

WD 875 LA 213 120 D.dwg

ProMation Engineering, Inc.
16138 Flight Path Drive
Brooksville, FL 34604
Ph:352-544-8436 Fx(352-544-8439

This document is the property of ProMation Engineering, Inc.
Distribution of this document without the written consent of the owner is strictly forbidden.
Failure to comply will incur a liability for damages.