rev	change date	revision	name
a	06.25.2014	New Document	KHL
b			
c			
d			
e			
f			
g			
h	.		

naming

dwn by: KHL

Date 6.25.2014

scale NONE

material no

ind

material

Wiring Diagram

ProMation

6/25/2014 11:39 AM

WD 875 LB 01 12DC D.dwg

Wiring Diagram for Local Control Station
P1 Series 12 VDC Actuators

WD 875 LB 01 12DC D

REV A

Description of Operation:
Local / Remote On/Off/Jog control
EOT HOT outputs as well as EOT indicator lights.

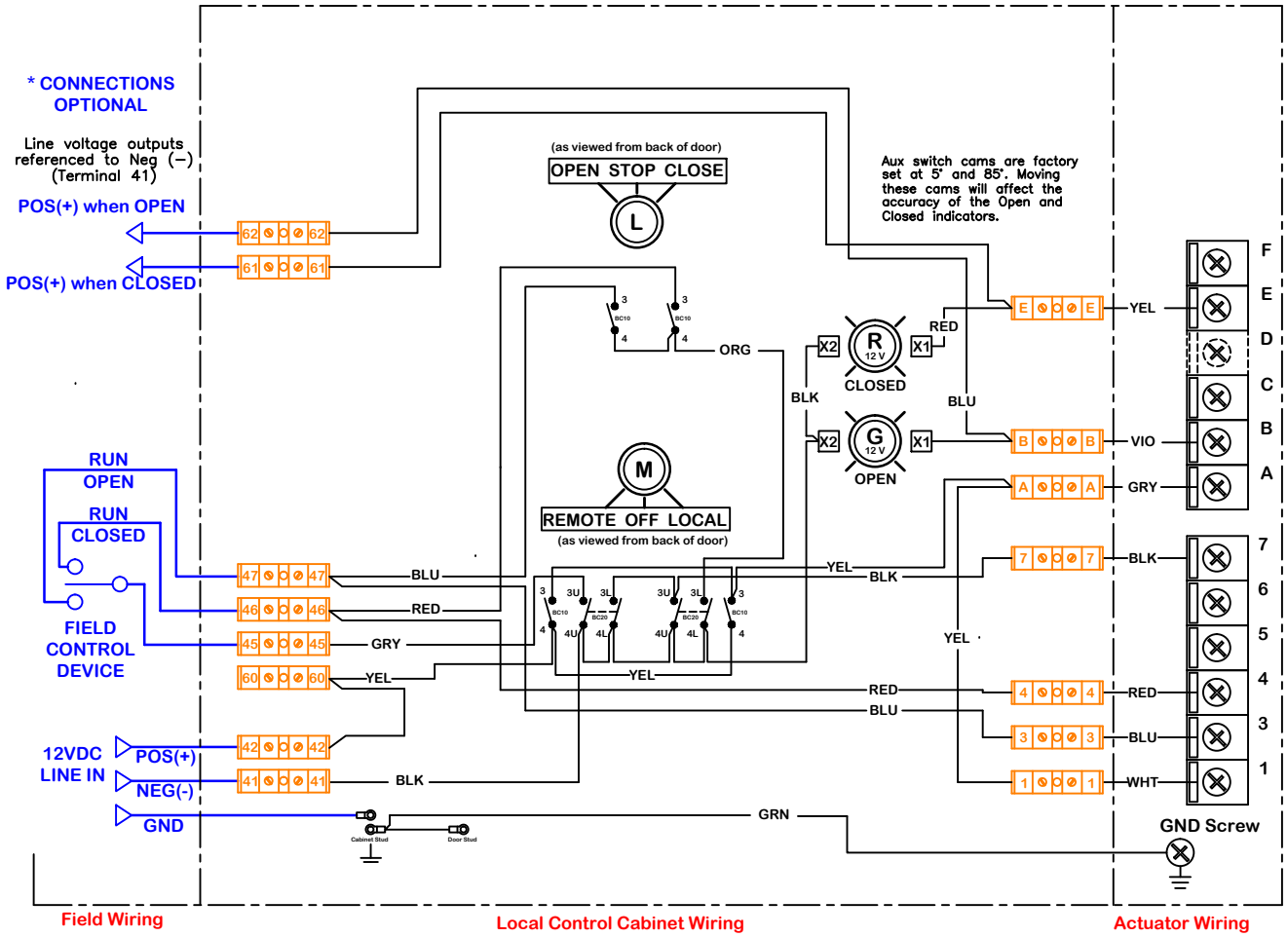

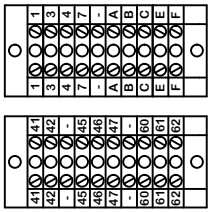

Terminal Block Layout (10x2)

Term Block Filename: Altech 875-LB 01

Faceplate Filename: 4 hole 5x5 Steel 110111

Notes:

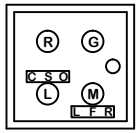

Door Hole Pattern

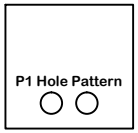

Back Hole Pattern

Use this solution for: P1 Series

Use For:

OPT LCS LB 01 P/S/F 12DC D/R

ProMation Engineering, Inc.
16138 Flight Path Drive
Brooksville, FL 34604
Ph:352-544-8436 Fx(352-544-8439

This document is the property of ProMation Engineering, Inc.
Distribution of this document without the written consent of the owner is strictly forbidden.
Failure to comply will incur a liability for damages.