rev	change date	revision	name
a	04.14.22	Swapped Indicated light open close from WD 875 LC 213 120 DR	DJG
b	00.17.22	Add 460-00028 and Relay for dry contact EOT out	DJG
c			
d			
e			
f			
g			
h			

naming

dwn by: BJW

Date 3.2.2012

scale NONE

ProMation

11/15/2022 2:08 PM

WD 875 LC 213 120 DR IR B.dwg

Wiring Diagram for Local Control Station
P2~13 Series 120VAC Actuators

WD 875 LC 213 120 DR IR B

REV B

material no

ind

material

Wiring Diagram

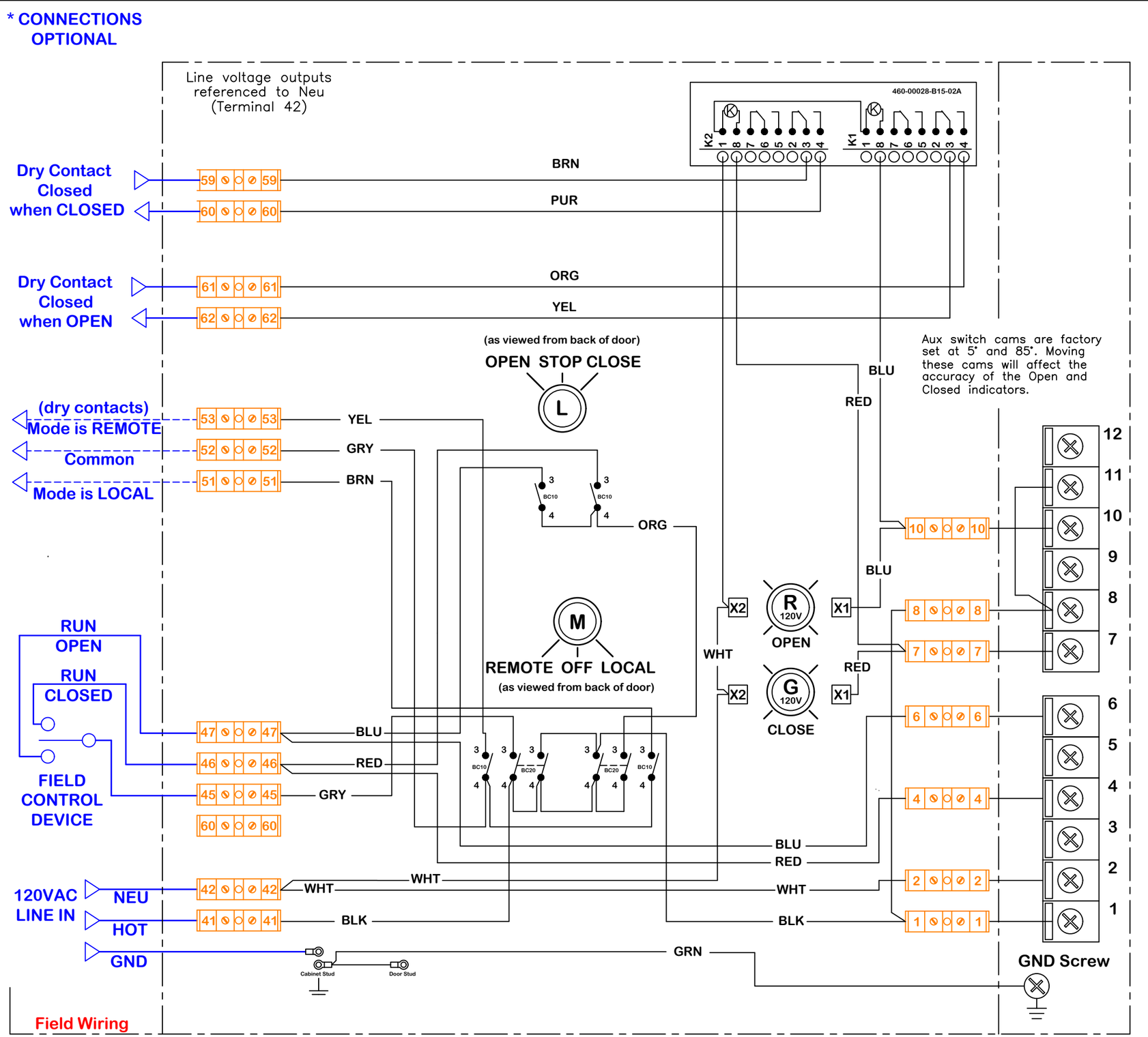

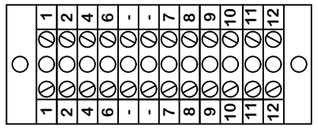

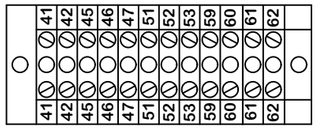

Terminal Block Layout (12x2)

Term Block Filename:	Altech 875 LC213120D
Faceplate Filename:	4 hole 5X5 Steel

Enclosure front & back hole patterns

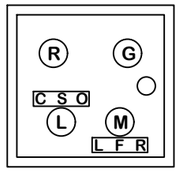

Door Hole Pattern

Back Hole Pattern

Notes:

Use this solution for: P2~P13 Series

Use For:

OPT LCS LC P2~13 P/S/F 120 D/R Indicator Reversed Dry EOT

ProMation Engineering, Inc.
16138 Flight Path Drive
Brooksville, FL 34604
Ph:352-544-8436 Fx(352-544-8439

This document is the property of ProMation Engineering, Inc.
Distribution of this document without the written consent of the owner is strictly forbidden.
Failure to comply will incur a liability for damages.