Description of Operation:
Provides Local/Remote control of Spring Return PROFIBUS actuators.
Indicator lights are provided as indication of actuator at end of travel.

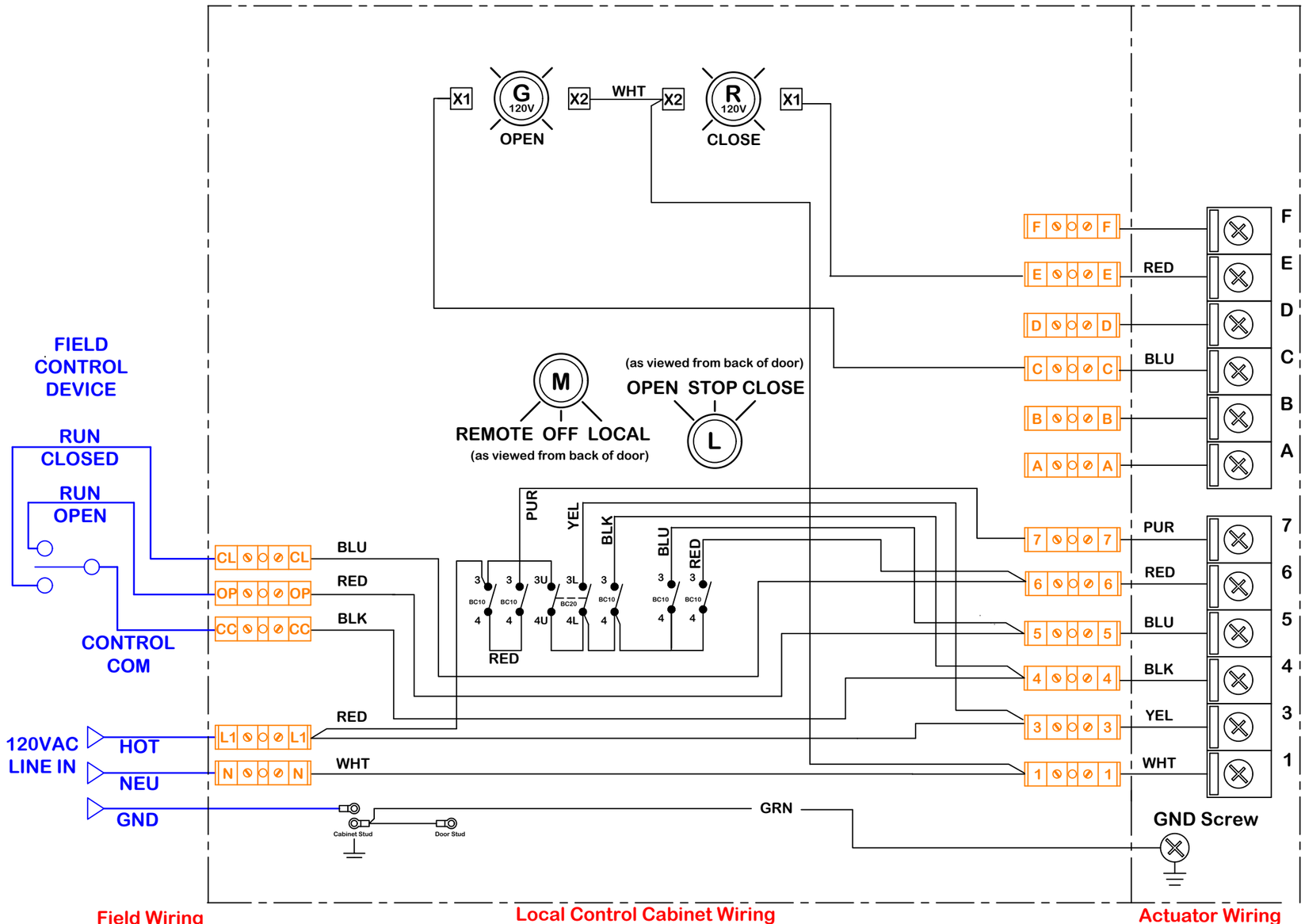

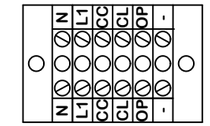

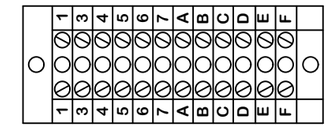

Terminal Block Layout (12x1)(6X1)

Term Block Filename:	Altech 875 LC213120D
Faceplate Filename:	4 hole 5X5 Steel

Enclosure front & back hole patterns

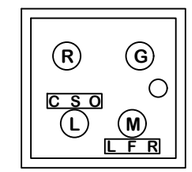

Door Hole Pattern

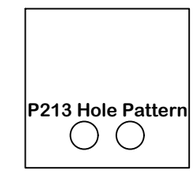

Back Hole Pattern

Notes:

This wiring diagram shows connections from Local Control Station to spring return Profibus on/off/jog units only! This wiring diagram DOES NOT SHOW the actuator wiring which is already pre-terminated at the factory for stand alone operation of the actuator. This diagram is intended to be used in conjunction with wiring diagram: WD-850-D4601_SR_120_Profibus when incorporating this Local Control Station to the existing actuator.

Use this solution for:
PB(O)-PD(O) Series

Use For:

OPT LCS LC PA-D(O) CW 120FS4 D/R (PFB)

rev	change date	revision	name
a	06.28.20	New DWG from LB 120 modified to 120FS4 Float ST with PFB	PMR
b			
c			
d			
e			
f			
g			
h			

naming

dwn by: PMR
Date 6.25.2020
scale NONE
material no .
ind
material

ProMation

WD 875 LC AD 120 PFB

Wiring Diagram for Local Control Station
SR PROFIBUS 120VAC Actuators

Wiring Diagram

REV A

6/30/2020 11:01 AM

WD 875 LC AD 120 PFB.dwg

ProMation Engineering, Inc.
16138 Flight Path Drive
Brooksville, FL 34604
Ph:352-544-8436 Fx(352-544-8439

This document is the property of ProMation Engineering, Inc.
Distribution of this document without the written consent of the owner is strictly forbidden.
Failure to comply will incur a liability for damages.