rev	change date	revision	name
c	08.15.2014	New Document	KHL
d	08.18.2014	Added "Interconnect Wiring" Note	KHL
e			
f			
g			
h			
i			
j	.		

naming

dwn by:	Date	
BJW	7.24.2014	.

material no

ind

material

Wiring Diagram

scale NONE

ProMation

8/18/2014 9:37 AM

WD 875 LD 213 230 R Field Install.dwg

WD 875 LD 213 230 R Field Install

Wiring Diagram for Local Control Station
P2~13 Series 230VAC Actuators

REV **D**

ProMation Engineering, Inc.
16138 Flight Path Drive
Brooksville, FL 34604
Ph:352-544-8436 Fx(352-544-8439

Description of Operation:

Provides Local/Remote control of P2~13 Series On/Off actuators.
Indicator lights are provided as indication of actuator at end of travel as well as to show Power.
Auxiliary contacts are carried through enclosure to a terminal block for easy access.
Dry contact output for remote indication of Local/Off/Auto switch position.

Aux switch cams are factory set at 5° and 85°. Moving these cams will affect the accuracy of the Open and Closed indicators.

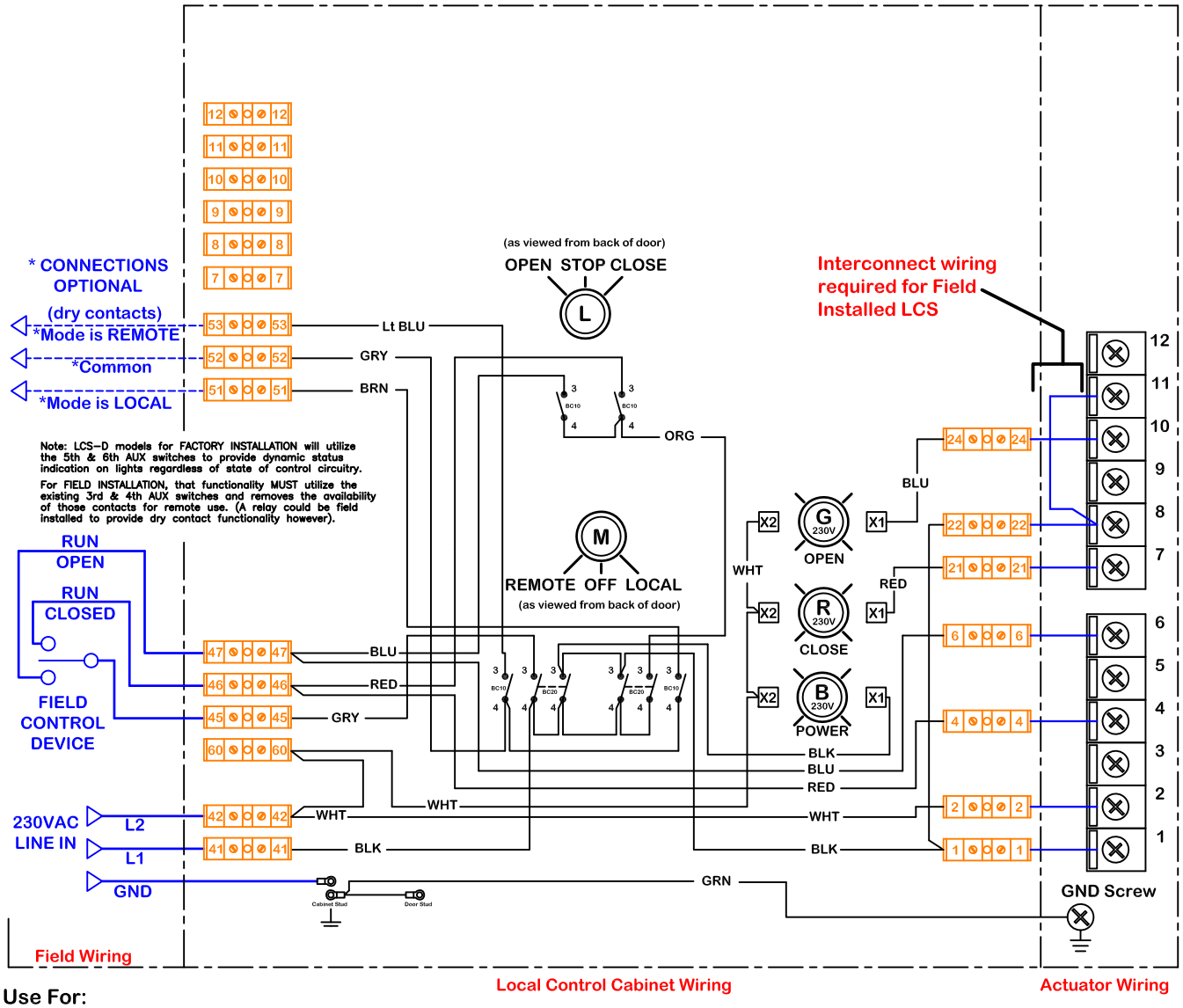

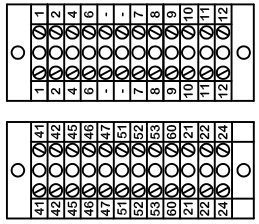

Terminal Block Layout (12x2)

Term Block Filename: Altech 875 LD213230D

Faceplate Filename: 5 hole 5x5 Steel

Enclosure front & back hole patterns

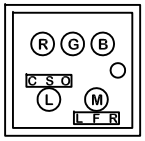

Door Hole Pattern

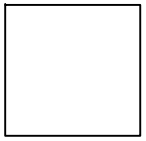

Back Hole Pattern

Notes:

Use this solution for:
P2~P13 Series

Use For:

OPT LCS LD P2~13 P/S/F 230 R w/o KIT-OPT-X

This document is the property of ProMation Engineering, Inc.
Distribution of this document without the written consent of the owner is strictly forbidden.
Failure to comply will incur a liability for damages.