| rev | change date | revision | name |
|---|---|---|---|
| c | 09.03.2015 | New Document | KHL |
| d | | | |
| e | 07.07.2016 | Added mA or % options | DJG |
| f | 09.03.2015 | Swapped upper and lower readout | DJG |
| g | 01.16.2023 | Add PL 1200 and 2000 product list | DJG |
| h | | | |
| i | | | |
| j | . | | |

naming

dwn by: BJW

Date 9.2.2014

scale NONE

material no

ind

material

Wiring Diagram

ProMation

1/16/2023 10:53 AM

Wiring Diagram for Local Control Station
P2~13; PL 1200/2000 Series 120VAC Modulating Actuators

# WD 875 LK 213 120 D

WD 875 LK 213 120 D.dwg

REV G

## Description of Operation:

Provides local/remote control of P2–13nd; PL1200 a 2000 Series Proportional control actuators. Auxiliary switches are utilized to drive the indicator lights.

A door mounted potentiometer provides a continuous proportional control to the actuator when in the LOCAL mode.

A digital display provides visual indication of the INPUT signal driving the actuator, either in manual mode (from pot) or remote mode (BAS control).

A second digital display provides visual indication of the FEEDBACK signal from the actuator.

Aux switch cams are factory set at 5° and 85°. Moving these cams will affect the accuracy of the Open and Closed indicators.

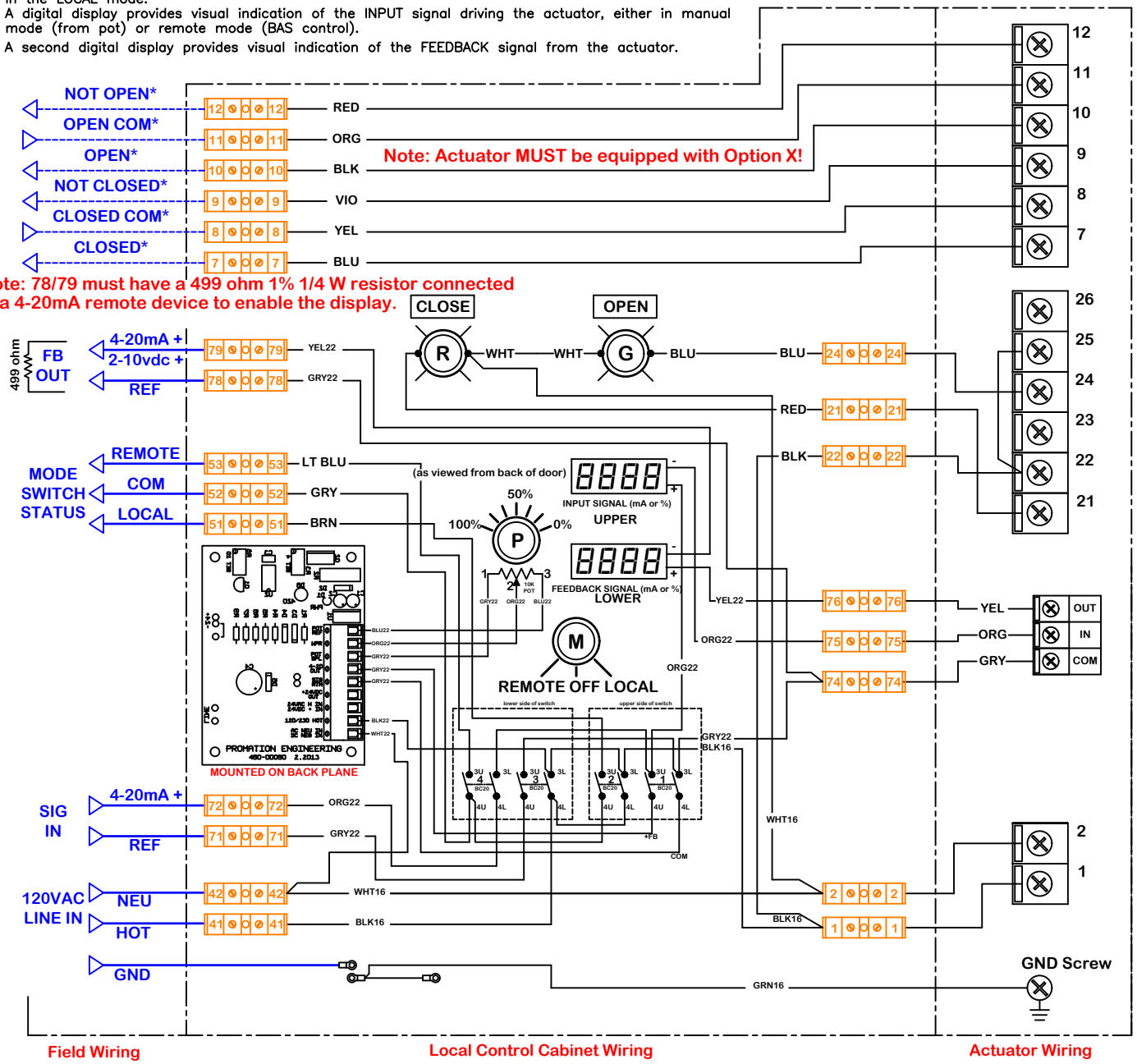


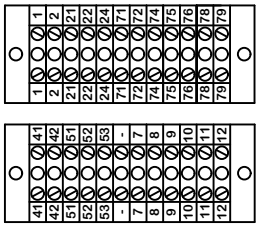


Terminal Block Layout (12X2)

Term Block Filename: Altech 875 LK213P120D

FacePlate Filename: 4 hole 5x7 dual display Steel % / 4 hole 5x7 dual display Steel mA / See Sales Order

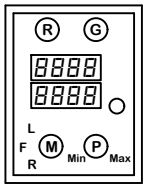


Door Hole Pattern

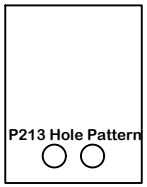


Back Hole Pattern

Enclosure front & back hole patterns

Notes:

THIS IS AN 8X6X6 ENCLOSURE!

**Specify Control:**

- ☐ 4-20mA Control
- ☐ 2-10vdc Control

**Specify Display**

- ☐ mA or VDC
- ☐ %

**Use this solution for:**
**P2~13 Series**

**Use LJ for:**
**P1, PA & PL Series**

Use For:

# OPT LCS LK 213 P/S/F 120 D/R


ProMation Engineering, Inc.
16138 Flight Path Drive
Brooksville, FL 34604
Ph:352–544–8436 Fx(352–544–8439



This document is the property of ProMation Engineering, Inc.
Distribution of this document without the written consent of the owner is strictly forbidden.
Failure to comply will incur a liability for damages.